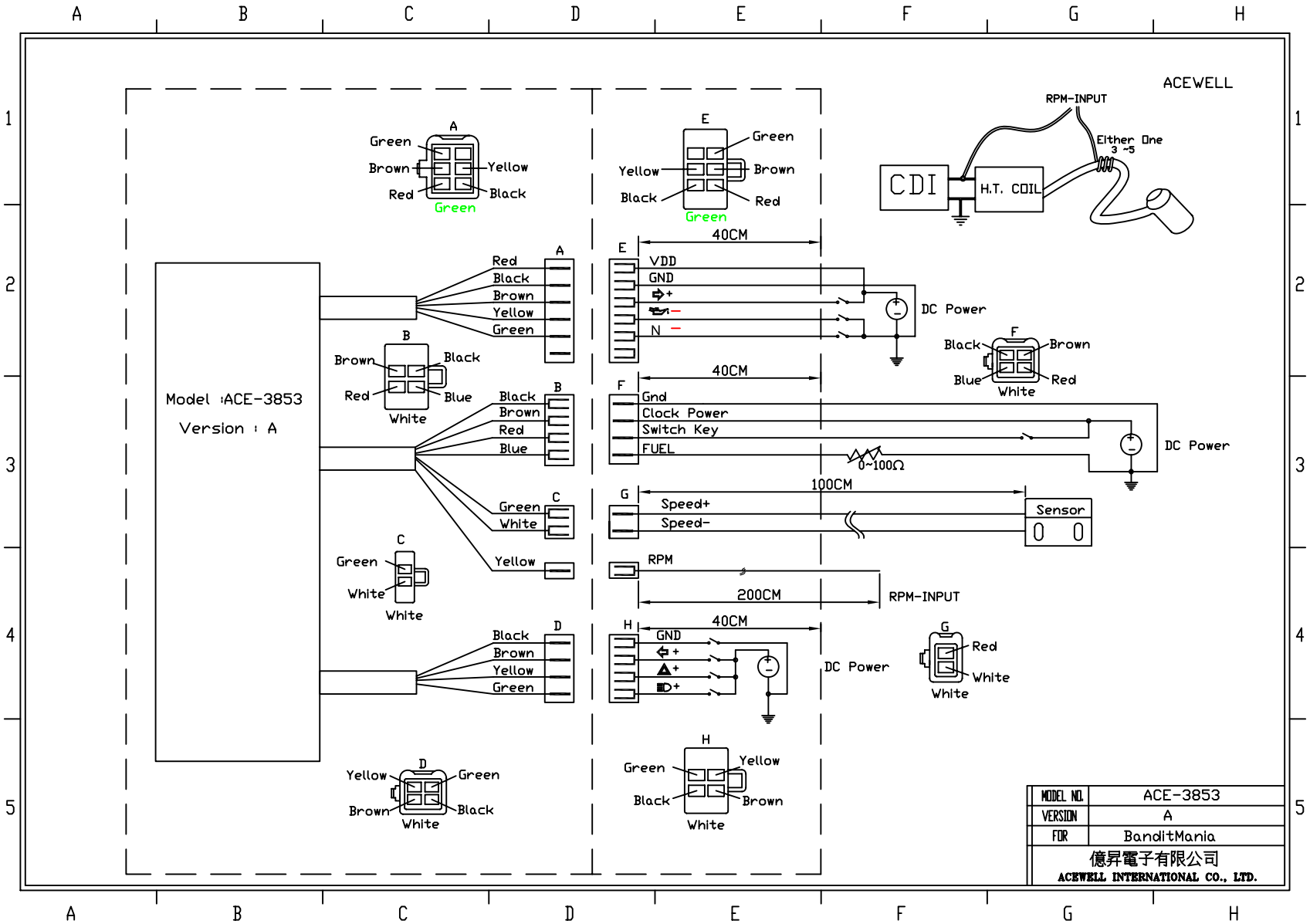
ACEWELL
Model :ACE-3853
Version : A
A
Green
Brown
Red
Yellow
Black
Green
B
Brown
Black
Red
Blue
White
C
Green
White
White
D
Yellow
Green
Brown
Black
White
E
Green
Yellow
Brown
Black
Red
Green
40CM
VDD
GND
N
DC Power
F
Black
Brown
Blue
Red
White
40CM
Gnd
Clock Power
Switch Key
FUEL
0~100Ω
DC Power
G
100CM
Speed+
Speed-
Sensor
0 0
RPM
200CM
RPM-INPUT
H
40CM
GND
DC Power
G
Red
White
White
H
Green
Yellow
Black
Brown
White
RPM-INPUT
Either One
3 ~5
CDI
H.T. COIL
MODEL NO. ACE-3853
VERSION A
FOR BanditMania
億昇電子有限公司
ACEWELL INTERNATIONAL CO., LTD.